MORE TRENCHES.
LESS TIME.
NO COMPROMISE.

CX95E PARALLEL OFFSET BOOM

PRELIMINARY SPEC SHEET

Max. Weight	9.4 t
Max. Power	73 hp
Max. Dig Depth	4,57m

CASE CONSTRUCTION

WORK ENVIRONMENT 5.0

Enter a next-generation operator experience. Enjoy premium seating and intuitive controls, with a 7-inch color display and dual jog shuttle dials for easy navigation and engine management.

Equipped with the E. O.C., the world's most advanced hydraulic system in this category, you can fine-tune and store the parameters of hydraulic tools, an advantage for demolition professionals.

The fuel pump with automatic shut-off, powerful LED lighting and more make every working day smoother, safer and more efficient.

CONTROLLABILITY AND MULTI-FUNCTION DESIGN

Excellent stability and high accuracy over the entire working range. Take control with multi-function joysticks and a vibrant color display that bring increased precision to your equipment. Easily adjust settings and save custom configurations for smooth transitions, maximizing the efficiency and performance of your jobsites.

HIGH-PERFORMANCE GRIPS

These grips provide precise control of AUX1, AUX2, and AUX3, with independent finger operation and features like swing control, adjustable speed, blade control, and flow memory for smooth, efficient use without lifting your hand.

SPECIFICATIONS

ENGINE	
4-cylinder, 3.3-litre Yanmar Stage 5. Liquid-cooled.	
Maximum power @2100 rpm	73 hp / 54 kW
HYDRAULICS	
eOC (electronic Open Center) system by Bosch Rexroth	
1 electronic variable displacement pump + 1 gear pump	
Pumps	100 + 14 cm3
Flow rate	192 + 27 lpm
Maximum pressure	290 bar
AUX 1 single/double action	100lpm, 200 bar
AUX 2 double effect	70-90lpm, 290 bar
AUX 3 double effect (opt)	50-50lpm, 250 bar
AUX1 Mulcher Provision (opt)	
"Constant Flow" additional pump	62 lpm, 200 bar
PERFORMANCES	
Max travel speed (2 automatic speeds)	2,6 - 5,2 km/h
Rotational speed	9,5 rpm
Rimpull Force	7.960 daN
Breakout force force (bucket)	6.300 daN
Breakout force force (arm)	4.350 (3.850) daN
DIMENSIONS	
Width	2,32 m
Height with FOPS level 2 guard	2,76m
Rear radius	1,22 m
Arm length: standard (long)	1,76 m (2,10m)
Tracks width	0,45 m
Number of rollers on each side	5+1
CAPACITIES	
Diesel	105 l
Hydraulic Oil	85 l
Hydraulic system	135 l
Cooling system	23 l
Engine Oil	10 l
TRANSPORT WEIGHT	
with 450mm rubber tracks	8,6 t
with 450 mm steel tracks	9,0 t
with 600 mm steel tracks	9,2 t
with 800 mm steel tracks	9,4 t
Additional external weight (opt)	810 kg
Additional internal weight (opt)	440 kg
OPERATING WEIGHT	
with 450mm rubber tracks	9,0 t
with 450mm steel tracks	9,4 t

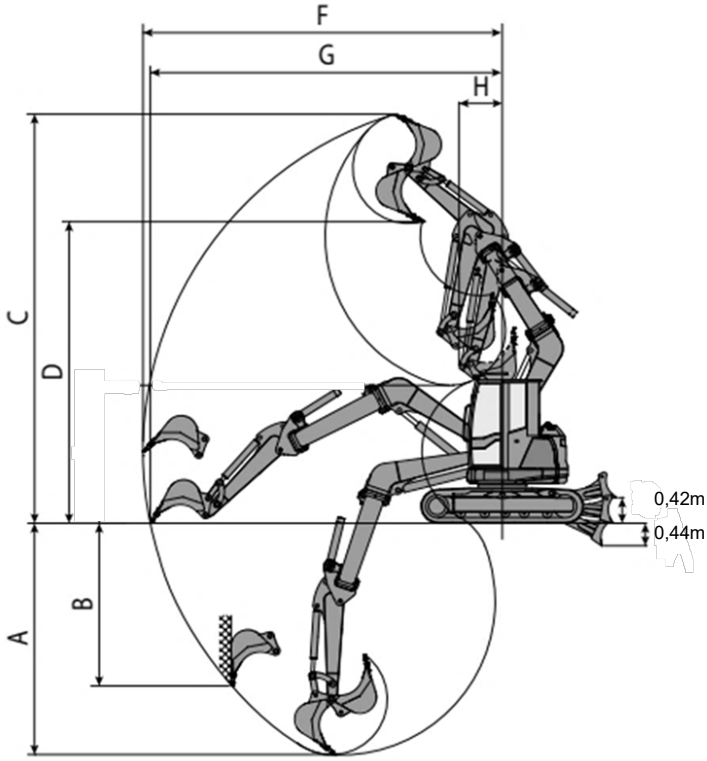

STANDARD ARM (1,76 m)			
	LEFT	CENTER	RIGHT
A	3,84 m	4,22 m	3,53 m
B	2,86 m	3,20 m	2,58 m
C	7,05 m	7,38 m	6,78 m
D	5,13 m	5,45 m	4,86 m
F	6,07 m	6,45 m	5,77 m
G	5,03 m	6,32 m	5,61 m
H	0,99 m	1,20 m	0,81 m

LONG ARM (2,10 m)			
	LEFT	CENTER	RIGHT
A	4,20 m	4,58 m	3,88 m
B	3,23 m	3,59 m	2,95 m
C	7,28 m	7,60 m	7,01 m
D	5,35 m	5,67 m	5,07 m
F	6,38 m	6,76 m	6,08 m
G	6,24 m	6,63 m	5,92 m
H	1,07 m	1,28 m	0,89 m

LIFT CAPACITY				
	3 m	4 m	5 m	MAX
Front, blade down	*4,4t	*3,2t	*2,5t	*2,3t
Front, blade up	3,0t	1,9t	*2,5t	1,2t
Side	2,3t	1,5t	1,1t	0,9t

- Offset in center position
- Distance measured from machine's rotation's center
- Data measured with cab and standard counterweight based on the ISO 10567:

Max 75% of static tipping load or 87% of the hydraulic lifting capacity.
"*" Indicates the hydraulic threshold is reached first.

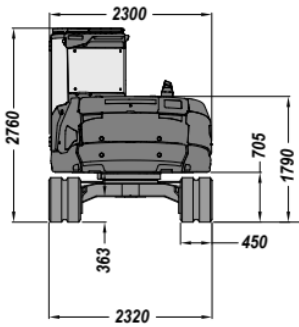

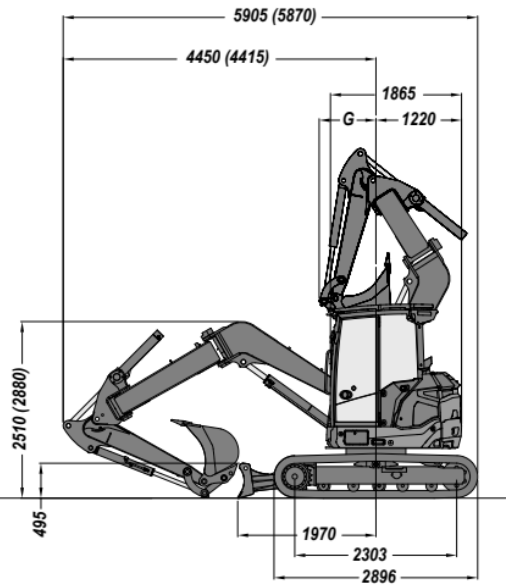

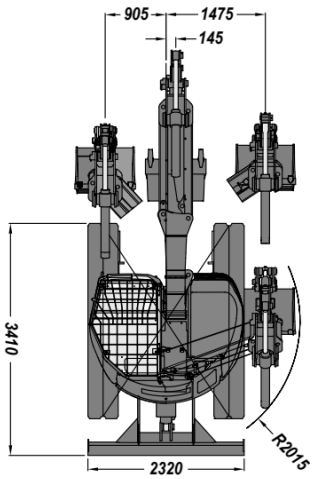

CUSTOMIZED SOLUTIONS BY CASE SPECIAL APPLICATIONS

DESIGNED, PRODUCED AND CERTIFIED BY CASE IN EUROPE

Our Special Applications team based in Italy customizes machines for specific needs, including military and beyond. We offer CE-certified vehicles, safe and compliant, unlike some local modifications that are not always recertified. By choosing CASE, a CNH brand, you are supporting the European economy and thousands of jobs.

NEED TO CONTACT US?

specialapplications@cnh.com

NOTE: Standard and optional fittings can vary according to the demands and specific regulations of each country. The illustrations may include optional rather than standard fittings - consult your Case dealer. Furthermore CNH Industrial reserves the right to modify machine specifications without incurring any obligation relating to such changes.

Conforms to directive 2006/42/EC